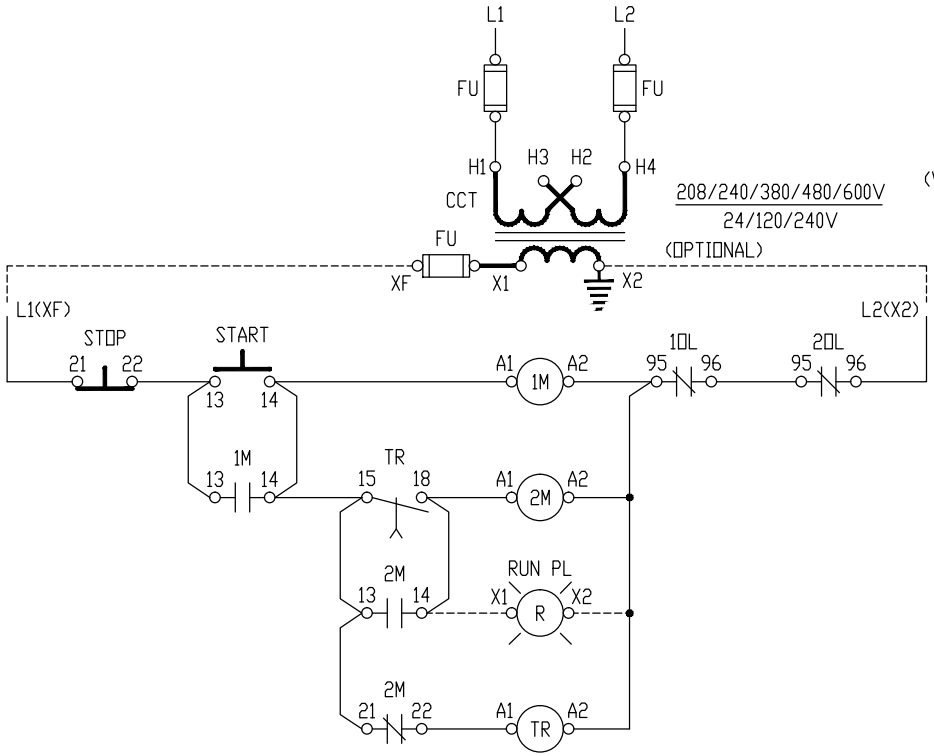

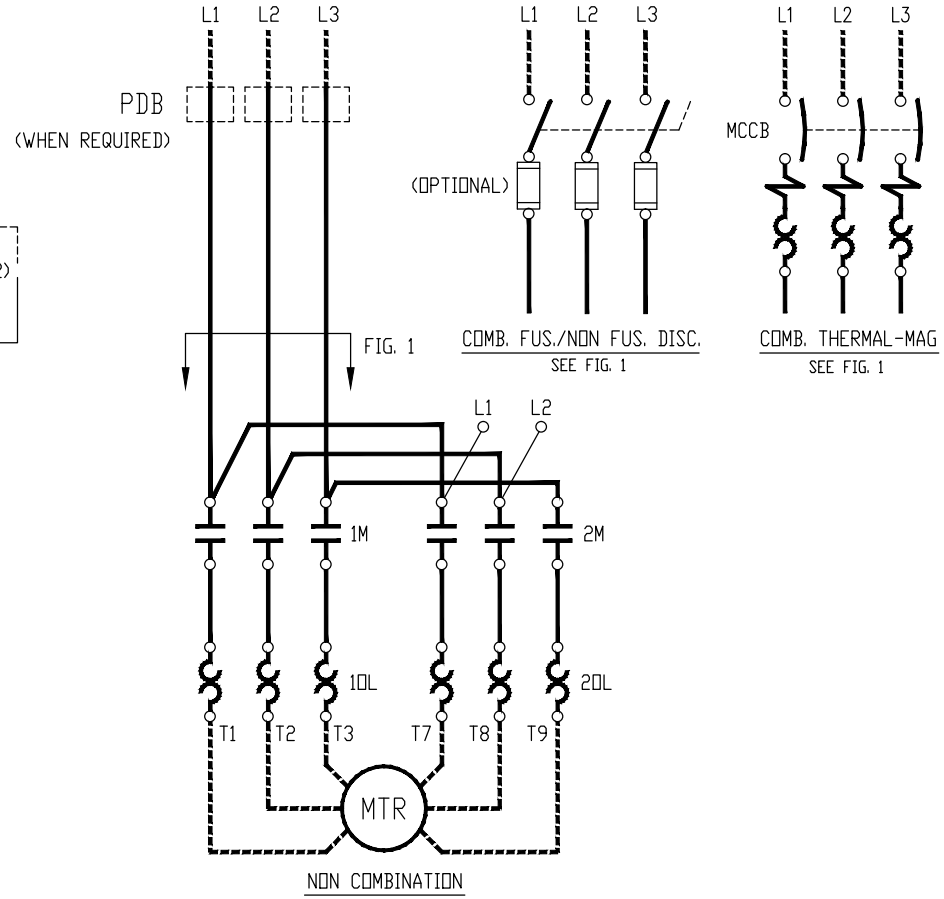

NOTES:

1). OVERLOAD RELAY SETTING: MOTOR FLC X 0.5.
2). X2 TERMINAL GROUNDED AS STANDARD, REMOVE IF NOT REQUIRED.
3). TIME DELAY RELAY TR TO BE SET TO SHORTEST TIME POSSIBLE: MAX. 3 SECONDS.
TIMING RELAY TR: RZ7-FSA3

REV	DESCRIPTION	DATE	APP'D
6	GENERAL REVISION	4-24-12	MR

DESIGNED EAP	REDUCED VOLTAGE STARTER PART WINDING TYPE START-STOP PUSHBUTTONS	sprecher+schuh HOUSTON, TEXAS
DRAWN EAP		DWG. NO. CAPWT WS-106-01
APPROVED PAB		SERIES 100
DATE 12-87		